Automatic Motorized Bench Vise

Student Name(s): Shawn Dye

Contents

Abstract 3
Introduction 3
Background 3
Literature Review/Market Analysis 4
Goals and Objectives 7
System Design 7
Working Principle/Concept 7
Detailed Calculations 8
Compiled DFMEA 10
Hardware Description 11
Testing and Analysis 11
Prototype Testing Plan 11
Test 1: Cycle Test 12
Test 2: Clamping Force Test 13
Test 3: Maintained Clamping Force Test 16
Test 4: Circuit Test 17
Test 5: Speed Control – Clamping Test 20
Production Test Plan 23

Conclusion 23
Future Work 24
References 24
Appendix A 26
Drawings/Schematics 26
BOM 32
Appendix B 33
Budget 33
Appendix C 33
Schedule/Gantt Chart 33
Appendix D 35
Block Diagram 35
Operational Diagram 35
Appendix E 36
Wiring Diagram 36

Table of Figures

Figure 1 - Calculation Definitions 8
Figure 2 - Known Values 8
Figure 3 - Detailed Calculations 9
Figure 4 – Exploded View, Assembly 11
Figure 5 - Cycle Test 13
Figure 6 - Clamping Force Test A 15
Figure 7 - Clamping Force Test B 15
Figure 8 - Clamping Force Test C 16
Figure 9 - Maintained Clamping Force Test 17
Figure 10 - Circuit Test A 19
Figure 11 - Circuit Test B 20
Figure 12 - Speed Control - Clamping Test A 22
Figure 13 - Speed Control - Clamping Test B 22
Figure 14 - Speed Control - Clamping Test C 23
Figure 15 – Rail Base 26
Figure 16 – Aluminum Rail 27
Figure 17 - Universal Joint 27
Figure 18 - Vise Coupler Bolt 28
Figure 19 - Vise Coupler 29
Figure 20 - Vise Coupler Nut 30
Figure 21 - Wood Slide 31

Figure 22 - Bill of Materials 32

Table of Tables

Table 1 - DFMEA Analysis 10

Abstract

MET400 Senior Project, Team 2 has elected to conceptualize, design, and fabricate an automated, motorized bench vise for our course project. Bench vises are an essential tool for fabrication, machining, and tooling of various components within manufacturing and other areas of machining workshops. Although these vises play a vital role in many industries, they typically share the problematic commonality of requiring the use of free hands to close or open the vise around the workpiece. Our team seeks to alter this problematic process by designing and fabricating an automated and motorized vise that can open and close by means of a foot-actuated control. In addition to being simply helpful, this also increases safety of handling and securing workpieces, allowing the free use of hands to allow for precise positioning of the vise jaws on irregularly shaped workpieces.

Introduction

Background

Vises have been employed in multifaceted workshop settings since the onset of the machine age as an aid to machining professionals and hobbyists alike. While the vise represented an advance in those tooling capabilities by offering a way to secure a piece of work (**workpiece**) while it was being tooled, the movements and actions of vises have remained largely unchanged for quite

some time. The movement of the mobile jaw has historically been controlled by a screw mechanism, cam, or lever.

The concept for the automated, motorized bench vise seeks to change this stagnation by incorporating a mechanical means for action on the movable jaw. The idea is centered on modification of an existing bench vise, engineering a design to incorporate the use of a motor to actuate the handle that provides forward and reverse action of the screw mechanism. The motor will exist parallel to the bench vise, connected via a jointed linkage. This motor will be controlled using a foot-pedal device, attached to the motor, which offers a forward and reverse directional signal to the actuator. The motor will connect to a common AC 120V outlet, standard in most environments.

Literature Review/Market Analysis

Current/Future Market Capitalization

For the calendar year of 2023, overall market cap for this product category was valued at approximately $479.4 million USD, and market projections indicate a market cap of approximately $633.6 million USD, by year 2032 (**Growth report [2032], 2024)**. Anticipated projections likely would have been greater, if not for the disruption in global production and supply-chain beginning in 2020, due to COVID-19.

Potential Customer Base

According to one industry report, "…*the market is segregated into automotive, industrial manufacturing, aerospace and defense, woodworking, and others*…" (**Growth report [2032], 2024)**. Given this information, we believe that our product falls into a lesser defined subcategory of these industries, and likely appeals to smaller machine shops and home hobbyists. We have

made a conscious decision not to compete in the industrial arena due to the costs of market entry and the complication of navigating regulations.

Pricing Models

We have researched similar products to compare features and assimilation with machinery. That said, we have decided our product will be offered as a standalone, aftermarket adaptation to existing vises.

- Prototype cost - $250 USD
- Manufacturing cost - $100 USD - $150 USD
- Product offering price - $499 USD
- Retail cost of a vise - $45 USD - $400 USD

Growth Factor

Its compatibility with different machine equipment is the main growth factor. Machining equipment would include drill presses, milling machines, lathes, and CNC machines.

Restraining Factor

The intense competition is the biggest restraining factor. Companies such as Gerardi SPA (Italy), BISON USA Corp (USA), STARK Spannsysteme GmbH (Austria) are leading competitors, and these are just a few.

Customer Surveys and Feedback

In support of designing and producing a product that aligns itself with the wants and needs of its potential market, this demographic was solicited for input to ascertain any reflections that might warrant incorporation into the design phase. The following categories were generalized from feedback and provided subsequent design theory.

- Affordability and propensity to purchase:

Overall receptiveness for the product concept and presentation of facts was well received. Of consensus concern was the issue of affordability, which we believe will be negated by the proposed retail pricing strategy. Another objection presented was the need to purchase a new vise when one was already owned. This objection was countered by the idea that this product would be layered onto existing vises.

- Safety considerations:

From a safety perspective, feedback was received that resulted in the addition of a “kill switch” to disable the operation, located on or around the motor. Another valued input was a suggestion for a pressure-sensing mechanism that would prevent material deformation or injury from accidental inclusion of an appendage in the vise. After careful consideration, the design team opted to include the former and not the latter, as each user has individualized needs with respect to the types of materials that will by encased by the vise jaws and the incorporation of e a universal design option is not feasible.

- Additional features to add value:

It was discovered that the foot-pedal operation was considered a compelling feature for the hands-free operation it affords but was also seen as a consideration for a potential safety feature. The idea of a slip clutch for repeatable processes was presented for feedback and found to have a limited audience, but did yield the fact that potential customers were willing to pay more for additional features.

Goals and Objectives

- We intend to design and prototype an aftermarket automation product to layer onto an existing bench vise, focusing on the needs faced by small machine shop operators and those of home hobbyists, as well.
- While pneumatic variations of vise-automation exist industrially and on some smaller scale, an unparalleled feature that we seek to produce in our product is the operation, controllable via a motor powered by a common 120V electrical outlet.
- Another intended feature of design our product will entail is the ability to control the automation with a foot-controlled pedal, allowing hands-free operation of the vise. This feature allows the operator to improve accuracy of jaw placement on the workpiece, through precise placement.

System Design

Working Principle/Concept

In general, a vise tightens and loosens about a workpiece through the articulation of one transient jaw of the vise along a slide, to completion at the opposing, immovable jaw. This rotary motion

is enabled by a lead screw running through the movable jaw, which is attached to a handle on the exterior of the vise. In most situations, the handle is moved forward or backward by hand.

The Automatic Motorized Bench Vise works as an added component to existing vises, redefining how the lead screw is advanced and retreated through the moving jaw. The rotary motion of the handle is recreated by a linkage attached to an adjacent electric motor. This linkage is secured to the vise lead screw by way of a coupling and to the motor by means of a universal joint. The motor is actuated via a foot-controlled pedal and powered through connection to a standard 120V wall outlet.

Detailed Calculations

Definitions

$P =$	$Force\ required\ to\ move\ the\ load$	$\Phi =$	$Thread\ angle$
$T_u =$	$Torque$	$L =$	$Lead$
$f =$	$Friction\ force$	D_{Maj}	$Lead\ screw\ diameter$
$N =$	$Normal\ force$	D_{Min}	$Lead\ screw\ pitch\ diameter$
$\lambda =$	$Lead\ angle$	$TPI =$	$Vise\ threads\ per\ inch$
$D_P =$	$Pitch\ Diameter$		

Figure 1 - Calculation Definitions

Known

$T_u = 13.02\ {}^{lb}/_{in}$	$L = 1$
$f = 0.15$	$D_P = 0.8125\ in$
$\Phi = 14.5°$	$D_{Maj} = 0.875\ in$

Figure 2 - Known Values

Calculations

$$Lead\ angle = \tan(\lambda) = \frac{1}{(TPI) \times (D_{Min}) \times (\pi)}$$

$$Lead\ angle = \tan(\lambda) = \frac{1}{(8) \times (0.8125\ in) \times (\pi)}$$

$$Lead\ angle = 2.80°$$

$$\mathrm{T}_{\boldsymbol{u}} = \frac{\mathrm{F}D_P}{2}\left[\frac{(\cos(\Phi)\tan(\lambda)\ f)}{\cos(\Phi) - f\tan(\lambda)}\right]$$

$$13.02\ {}^{lb}/_{in} = \frac{\mathrm{F}(0.8125\ in)}{2}\left[\frac{(\cos(14.5°)\tan(2.80°) - 0.15)}{\cos(14.5°) - (0.15\ )\tan(2.80°)}\right]$$

$$\mathrm{F} = 156\ \mathrm{lbf}$$

Figure 3 - Detailed Calculations

Compiled DFMEA

Table 1 - DFMEA Analysis

Failure Mode and Effect Analysis (FMEA)

Document #: | Issue date: | Revision #: | Revision date:

Process: | **Process owner:** | **Project ID:** Team 2 | **Project title:** Automatic Motorized Bench Vise

	Identify process steps	How can the process go wrong?	What is the impact if it goes wrong	How severe?	What could cause the failure to occur?	OCC of causes	What controls exist to prevent or detect?	Rate of detect	SEVxOCCx DET	What are the actions for reducing the occurrence of the causes or for improving the detection			What were the actions implemented				
	System/ Function	**Potential Failure Mode**	**Potential Failure Effect**	**SEV**	**Potential Causes**	**OCC**	**Prevention/ Detection**	**DET**	**RPN**	**Recommended Corrective Action**			**Corrective Action**				
										What?	Who?	When?	Action Taken	SEV	OCC	DET	RPN
1	Universal Coupler failure	The hinges that interconnect the rigid shafts may become compromised.	Customer dissatisfaction. Inability to use the product.	8	Material defect. Overstressing through extreme angle of engagement.		Ensure that the position between interconnecting shafts remains somewhat perpendicular. FEA analsysis testing material stength under stress.										
2	Misalignment between vise screw and motor shaft	General discourse between perpendicularity connecting components, resulting in an angle at which the lead screw fails to turn.	Some customer dissatisfaction. Pause in work to realign the components.	4	Misalignment of the vise and adjacent motor assembly. Failure of universal coupler join.		Ensure that adjacent and complimenting position between the vise and motor assembly are correct and adequately secured to their supports.										
3	Vise failure	Breakage of any vise component due to extreme over tightening.	The vise that the product is designed to operate becomes unusable and could cause harm to the user.	9	Overtightening of the vise causing considerable stress in the lead screw and vise body/jaws.		The user should not use a vise that is smaller than recommended. The selected vise should be able to withstand the clamping pressure of the motor.										
4	Vise Coupler failure	Fracture of connection to universal joint or of the bolt linking the coupler to the vise screw.	Dissatisfaction and probable inability to use product.	7	Overtightening of the vise causing undue stress on the coupler.		Using steel as the coupler material minimizes the possibility of failure.										
5	Electrical or Motor failure	Power oveloading the motor.	This would cause the entire vise to stop working.	9	Not having the correct input voltage.		Ensure that the power source being used meets the requirements for the motor.										
6	Fastener failure in rail/motor base	Stress on the fastener can cause it too much tension and cause the metal to crack.	This would cause instability in the vise.	7	Overloading the fastener can cause this kind of stress.		This can be avoided by ensuring notifying the customer of the stress levels and how to not overbear.										

Continuous Improvement Toolkit . www.citoolkit.com

Guide:
The left hand side should be completed during the first draft of the FMEA, and the right hand side are used to track subsequent actions and document reduced RPNs.
Severity rating (high rating is the most severe): (1) Minor failure which is not noticed by the customer. (2) Failure that could be noticed by the customer without negatively affecting customer satisfaction.
(3) Moderate failure that may result in some customer dissatisfaction. (4) Major failure that may generate high level of customer dissatisfaction. (5) Safety issue, adverse impact on end-user, etc.
Occurrence rating (high rating is almost inevitable): (1) The cause of the failure is unlikely to occur. (2) The cause of the failure occurs sometimes.
(3) An occasional occurrence of the cause of the failure. (4) A frequent occurrence of the cause of the failure. (5) The occurrence of the cause of failure is very probable.
Detection rating (high rating means very low chance of failure detection by the current control): (1) Reliable detection control to detect failure mode. (2) High likelihood that the current control will detect failure mode.
(3) Moderate likelihood that the current control will detect failure mode. (4) Low likelihood that the current control will detect failure mode. (5) No control available to detect failure mode or ineffective control.

Hardware Description

Figure 4 below is the assembly drawing of our design.

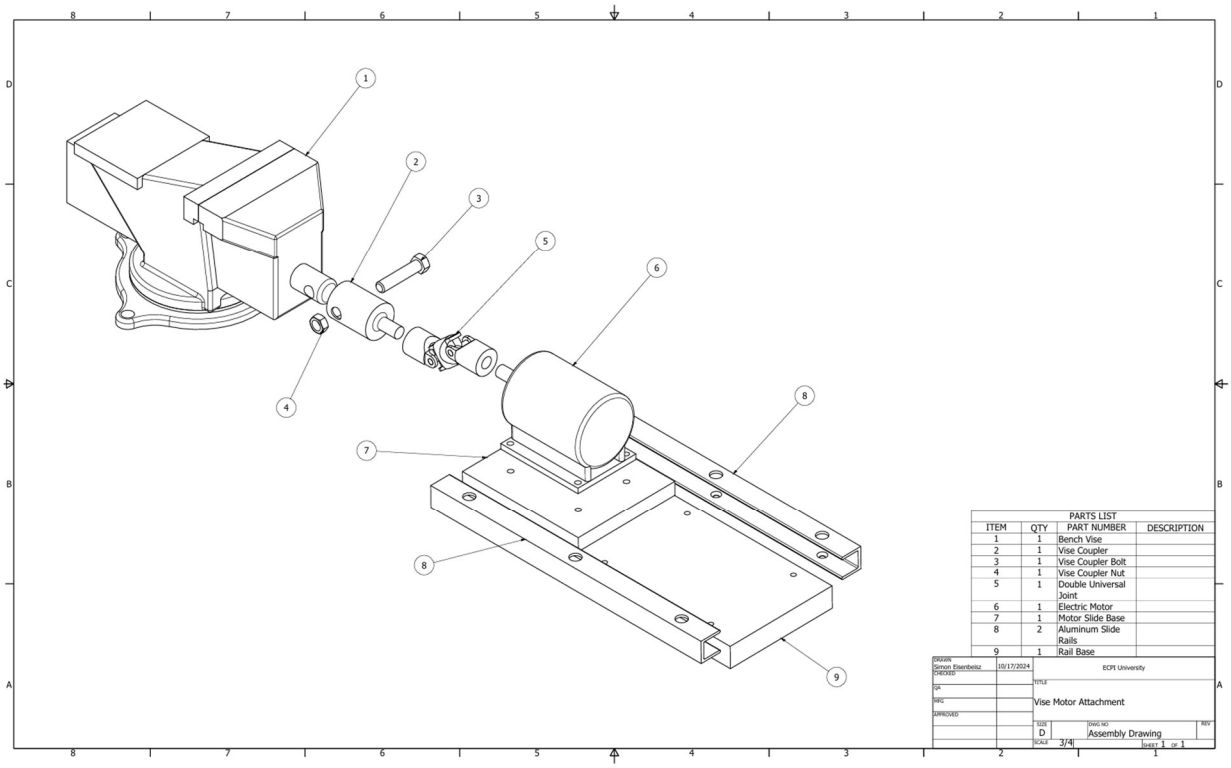

Figure 4 – Exploded View, Assembly

Testing and Analysis

Prototype Testing Plan

For the prototype testing, we plan to complete a series of tests, described as: a cycle test to ensure that the vise with motor fully opens and closes when run through complete cycles; a clamping force test to ensure that pressure achieved is sufficient to secure the workpiece; a maintained clamping force test to verify that the motor does not allow the shaft to back off when movement is applied to the workpiece; a circuit test verifying the polarity of the vise movement aligns with

the directional commands received from the foot pedal; and, a speed control clamping force test to ensure that the clamping force remains translational when varied shaft speeds are applied.

Test 1: Cycle Test

Purpose: Ensure that shaft and couplings maintain alignment across multiple full cycles of opening and closure of the vise jaw.

Equipment: Vise, motor, couplings, and lead screw shaft.

Steps:

1. Plug in and switch on the motor control and set the speed to full.
2. Run the motor to fully open and then close the vise jaws, repeating the process at least 5 times in quick succession.

Pass Criteria: The motor successfully opens and closes the vise through five full cycles.

Fail Criteria: The motor does not successfully open and close the vise through five full cycles.

Test Results: The device performed 5 full opening and closing cycles consecutively without any issues. Since this test was in addition to all the other tests, more cycles were run under other conditions.

Performed by: Simon Eisenbeisz

Date: 11/27/2024

Observations and Images:

Figure 5 - Cycle Test

Test 2: Clamping Force Test

Purpose: Ensure that the motor provides enough torque on the lead screw shaft to fully engage and apply enough pressure through the vise jaw to secure the workpiece between the two vise jaws.

Equipment: Prototype, pressure-sensing device.

Steps:

1. Place the measurement device (scale or wood for testing crushing force) between the jaws of the vise.
2. Close the jaws until the clamping force reaches a peak and the motor stops.
3. Compare the clamping force of the motor attachment and when tightening the vise by hand.

Pass Criteria: The prototype generates the force of 400lb when measured on the pressure-sensing device.

Fail Criteria: The prototype fails to generate the force of 400lb when measured on the pressure-sensing device.

Test Results: The device was able to generate a clamping force of at least 250lb, as this was the limit of the scale use for measurement. The motor was able to turn the vise handle around a quarter turn after maxing out the scale, indicating that the actual clamping force is higher was able to be measured.

Performed by: Simon Eisenbeisz

Date: 11/27/2024

Observations and Images:

Figure 6 - Clamping Force Test A

Figure 7 - Clamping Force Test B

Figure 8 - Clamping Force Test C

Test 3: Maintained Clamping Force Test

Purpose: Verify that once in the closed and clamped position, pressure and movement applied about the workpiece does not convey a reversal of the lead screw shaft once the motor is no longer actively engaged.

Equipment: Prototype, experimental workpiece, tool to pry against vise jaws and workpiece.

Steps:

1. Place the test object between the jaws and clamp until the motor begins to slow down.
2. Wiggle the clamped object to test if there is any loosening of the jaws.

Pass Criteria: When fully closed, movement about the workpiece fails to cause the vise jaw to open/reverse against the lead screw.

Fail Criteria: When fully closed, movement about the workpiece causes the vise jaw to open/reverse against the lead screw.

Test Results: The vise was able to maintain clamping force just fine, and there was no rotation of the handle or motor when the clamped board was moved.

Performed by: Simon Eisenbeisz

Date: 11/27/2024

Observations and Images:

Figure 9 - Maintained Clamping Force Test

Test 4: Circuit Test

Purpose: Verify that the directional polarity given by the reverse and forward motions in the foot pedal cause the same directional action of the vise shaft movement.

Equipment: Wired motor, foot pedal, and speed control

Steps:

1. Plug in the motor and test both the forward and reverse foot pedals, as well as the speed control and shutoff switch for functionality.

Pass Criteria: When the forward direction of the foot pedal is engaged, the lead screw moves forward in a manner that would close the vise jaws. When the reverse direction of the foot pedal is engaged, the lead screw moves backwards in a manner that would open the vise jaws.

Fail Criteria: Forward and reverse direction of the foot pedal fails to cause the anticipated directional movement of the lead screw.

Test Results: Pass. The controls work exactly as intended. The foot pedal reverses the direction of rotation of the motor, the speed control allows the rotation speed to be adjusted, and the shutoff switch is functional. The foot pedal is also wired so that when both pedals are depressed, both the clockwise and counterclockwise circuits are broken so that the motor does not behave erratically.

Performed by: Simon Eisenbeisz

Date: 11/23/24

Observations and Images:

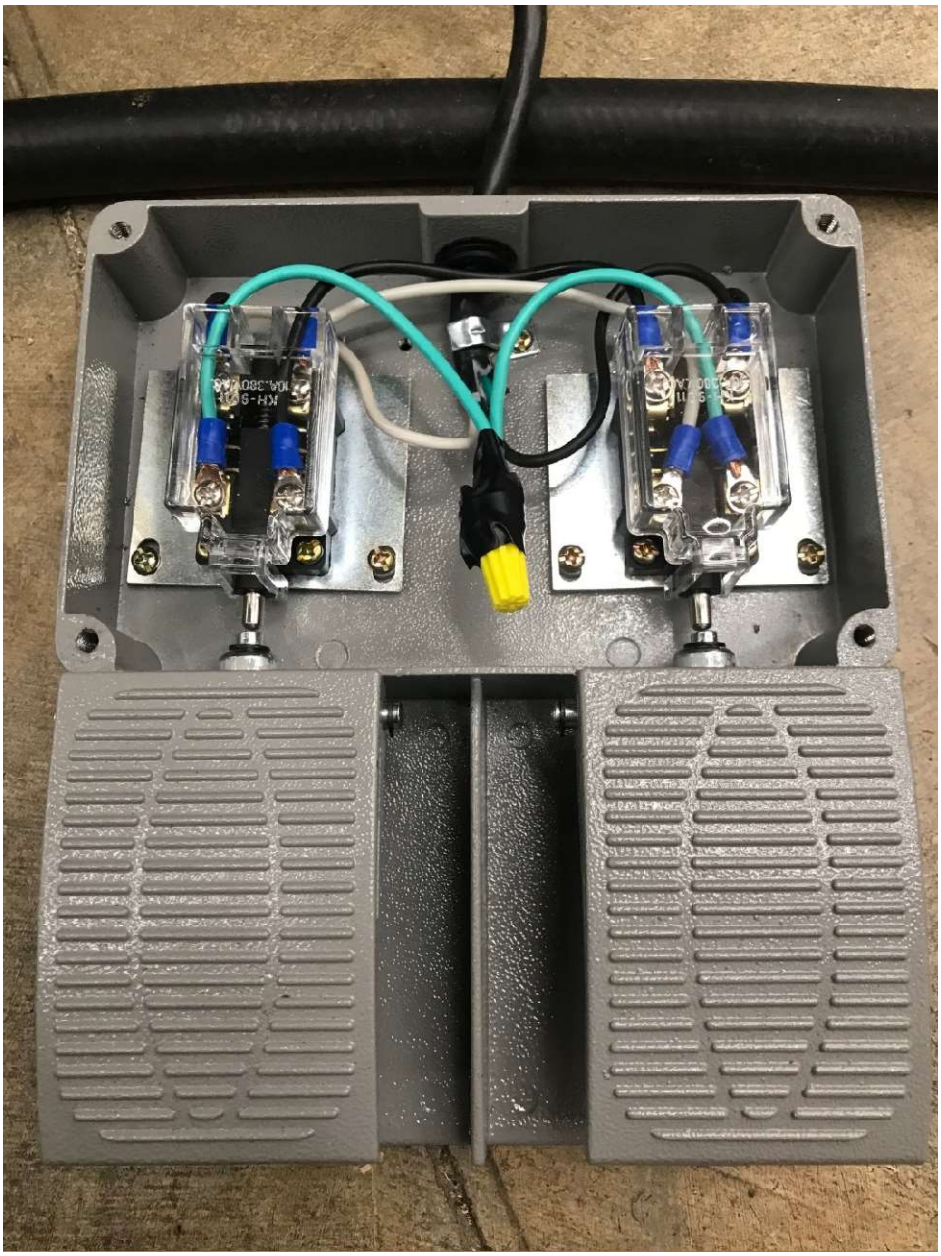

Figure 10 - Circuit Test A

Figure 11 - Circuit Test B

Test 5: Speed Control – Clamping Test

Purpose: Determine whether the clamping force is affected by variation of the speed control settings.

Equipment:

Steps:

1. Set the speed control to a low setting of 20-30% and close the jaws around a scale or piece of wood to test crushing.
2. Repeat this test for speed setting of 50% and 100%. Compare the results for each setting; any differences should be easily recognizable.

Pass Criteria: When the rotational speed of the motor shaft is varied by the speed controller, clamping force remains static across tested speeds.

Fail Criteria: When the rotational speed of the motor shaft is varied by the speed controller, clamping force fails to remain static across tested speeds.

Test Results: The clamping force is affected by the setting of the speed control; however, clamping force is still considerable even at very low speeds.

Speed setting vs. clamping force:

100%: >250 lb.

75%: >250 lb.

50%: >250 lb.

25%: 210 lb.

20%: 195 lb.

15%: 185 lb.

10%: 155 lb.

5%: 125 lb.

Performed by: Simon Eisenbeisz

Date: 11/27/2024

Observations and Images:

Figure 12 - Speed Control - Clamping Test A

Figure 13 - Speed Control - Clamping Test B

Figure 14 - Speed Control - Clamping Test C

Production Test Plan

For the production test plan, we would elect to have the clamping force verified by a qualified sensing device that is designed for these testing conditions. Additionally, we would increase the cycle production test to ten thousand cycles to test all components within the prototype, such as the motor.

Conclusion

While vises have been used in both commercial and domestic applications for many years, opportunities to automate and mechanize the actions of the traditional lead screw and subsequent jaw action have remained largely archaic. Through the course of this project, our team identified a robust and penetrable market, as well as design feedback from the target demographic to design and prototype an automated product that would function as a layered addon to existing vises and require only a standard electrical outlet for operation. Further, our team successfully modeled

prototype drawings, assemblies, and vetted design calculations for viability. From these concept documents, our team successfully created a fully-operational prototype that may be brought to bear into production with only minor modifications. The *Automatic Motorized Bench Vise* is a product that is well thought-out and designed for a market starved for innovation, at a price that the average small shop or home hobbyist can afford and be excited to own.

Future Work

In contemplation of taking this product to market, our team would likely incorporate additional standard and optional features that would increase market appeal and possibly a new demographic. One of these standard features would be the inclusion of a pressure-sensing switch that would prevent overpressure between the jaws of the vise, adding an additional safety layer and preventing the workpiece from experiencing deformation. Given even larger liberty, perhaps the pressure switch could be varied by the user for situational dependency. Another optional feature we would have added would be the addition of a slip clutch to allow for repeatability of pressure settings.

References

Convert KG-cm to LB-in - conversion of measurement units. unit conversion. (2024, October 18). https://www.convertunits.com/from/kg-cm/to/lb-in

Gill, P. (2019, March 2). *How to calculate force from Velocity*. Sciencing. https://sciencing.com/how-to-calculate-force-from-velocity-12318069.html

n/a. (2024). *6 inch machine tool processing fixture automatic air power vise for CNC milling machine - buy pneumatic machine vise high precision pneumatic hydraulic angle fixed machine powerful fishing cross side quick release cast Bench Vise Cnc Milling Machine drilling machine powerful quick clamp universal rotating mechanical adjustable bench vise product on Alibaba.com*. www.alibaba.com. https://www.alibaba.com/product-

detail/6-inch-Machine-Tool-Processing-Fixture_1600382933314.html?mark=google_shopping&seo=1

n/a (2020, January 17) *Automatic motorized bench vise*. Nevon Projects. https://nevonprojects.com/automatic-motorized-bench-vise/

n/a. (2024, September 23). *Machine bench vices market size, share: Growth report [2032].* Machine Bench Vices Market Size, Share | Growth Report [2032]. https://www.fortunebusinessinsights.com/industry-reports/machine-bench-vices-market-100647

n/a. (2024). *Posi Lock PTPHV859ASPX hydraulic vise*. Mile. https://www.mile-x.com/posi-lock-ptphv859aspx-hydraulic-vise/?gad_source=1&gclid=CjwKCAjwmaO4BhAhEiwA5p4YL1NknNnhy6qxk7ZH_aiG3Ij2qvNk-e1xaVUI33IMCqN2mFtderreWBoCoaAQAvD_BwE

Szyk, B. (2024, March 18). *Mechanical advantage calculator*. Omni Calculator. https://www.omnicalculator.com/physics/mechanical-advantage

Appendix A

Drawings/Schematics

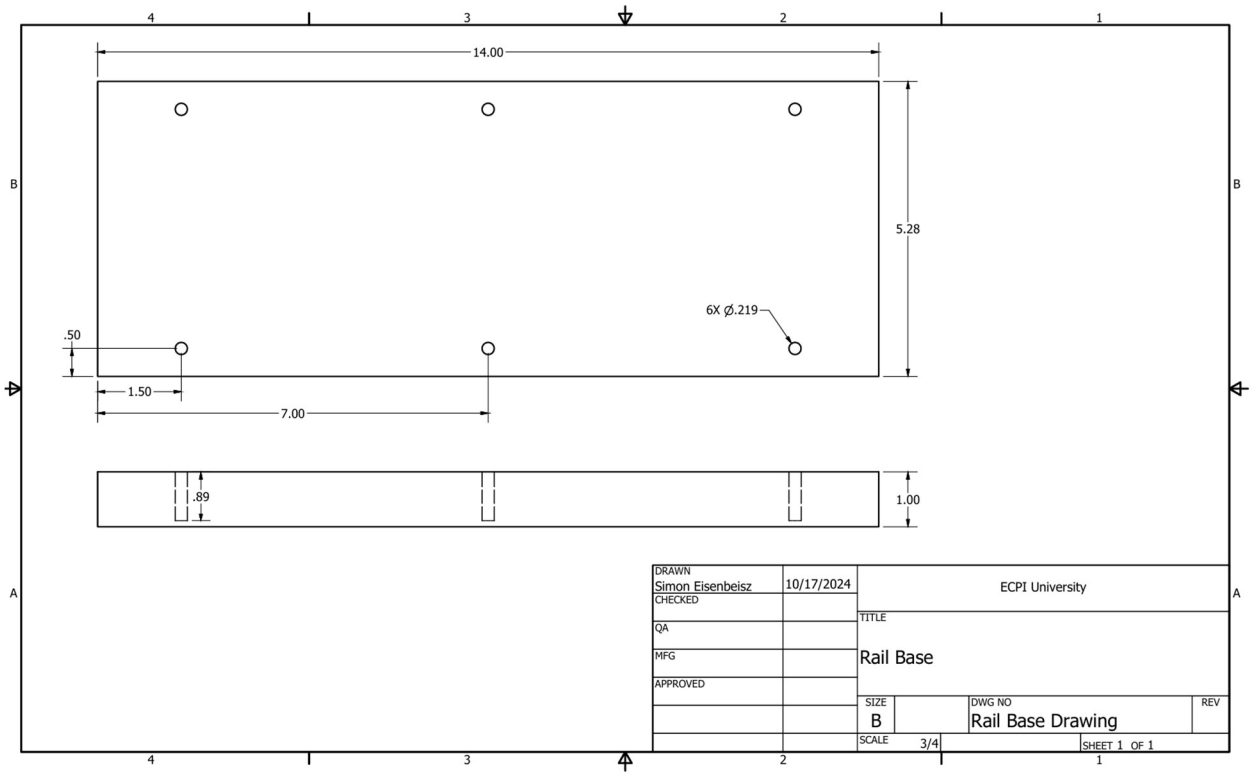

Figure 15 – Rail Base

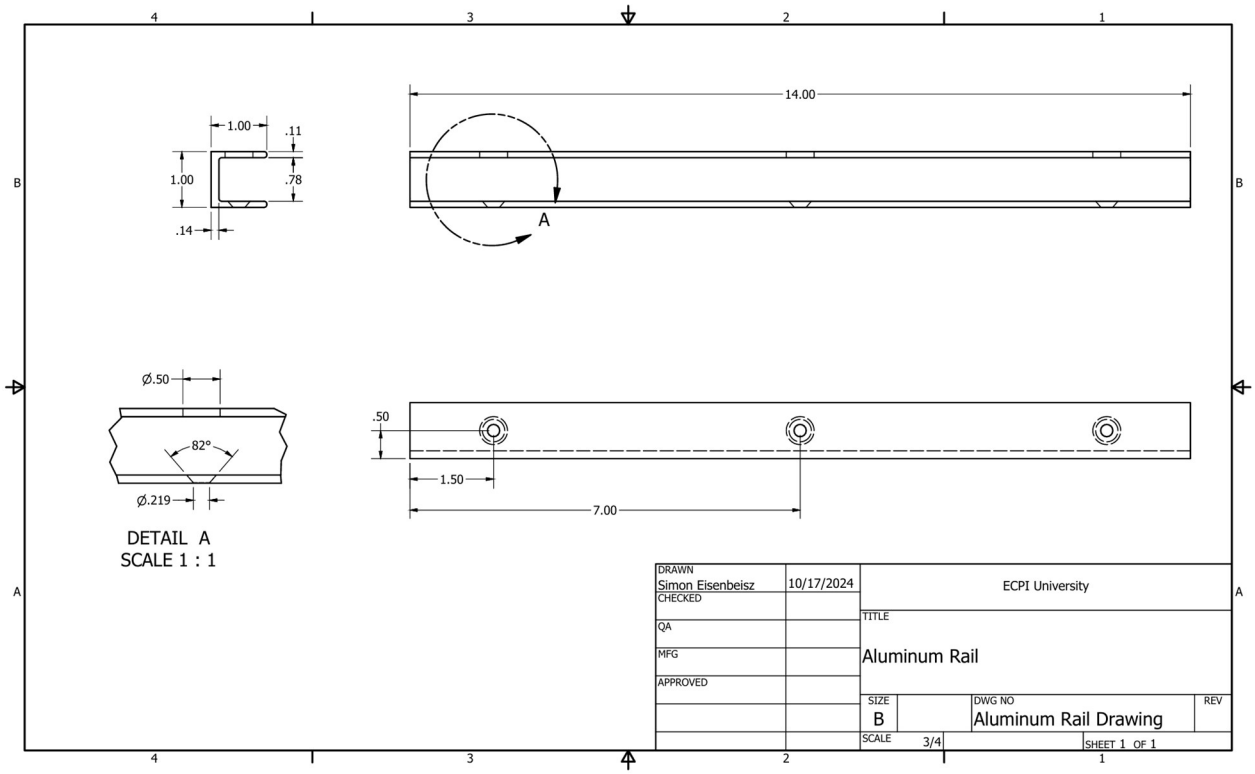

Figure 16 – Aluminum Rail

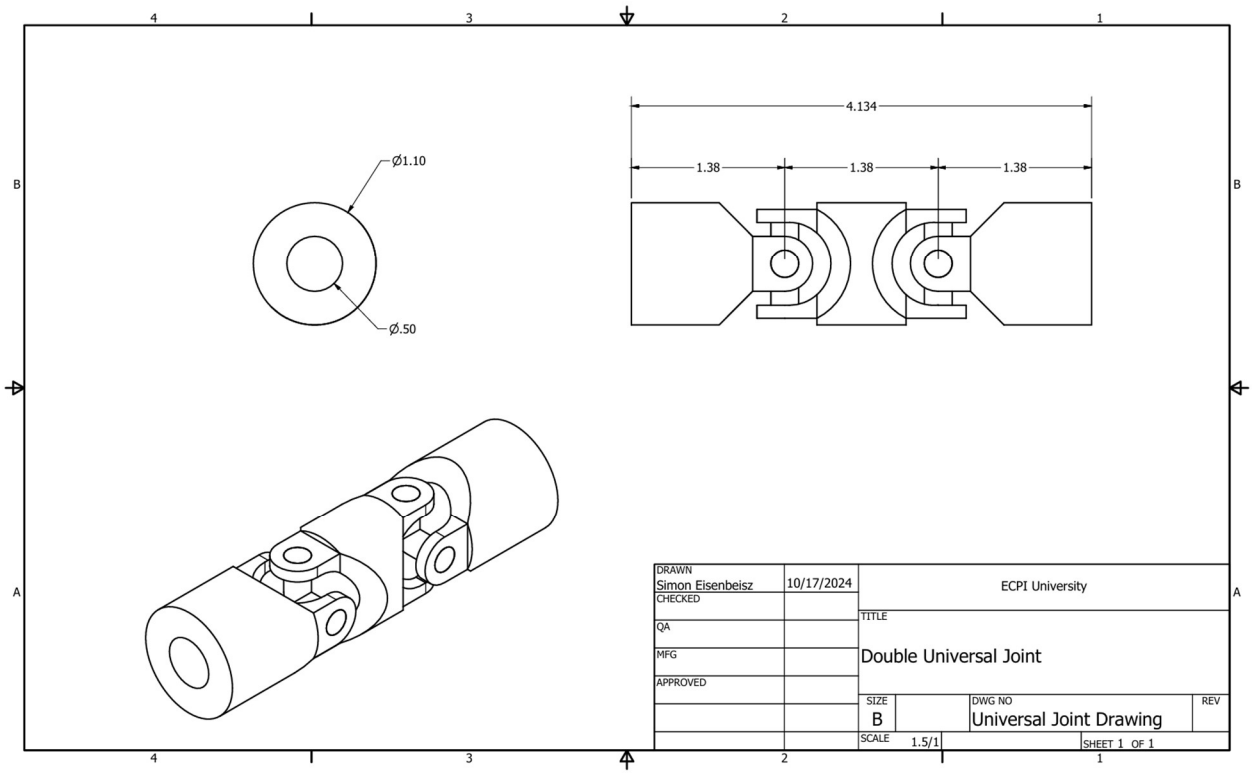

Figure 17 - Universal Joint

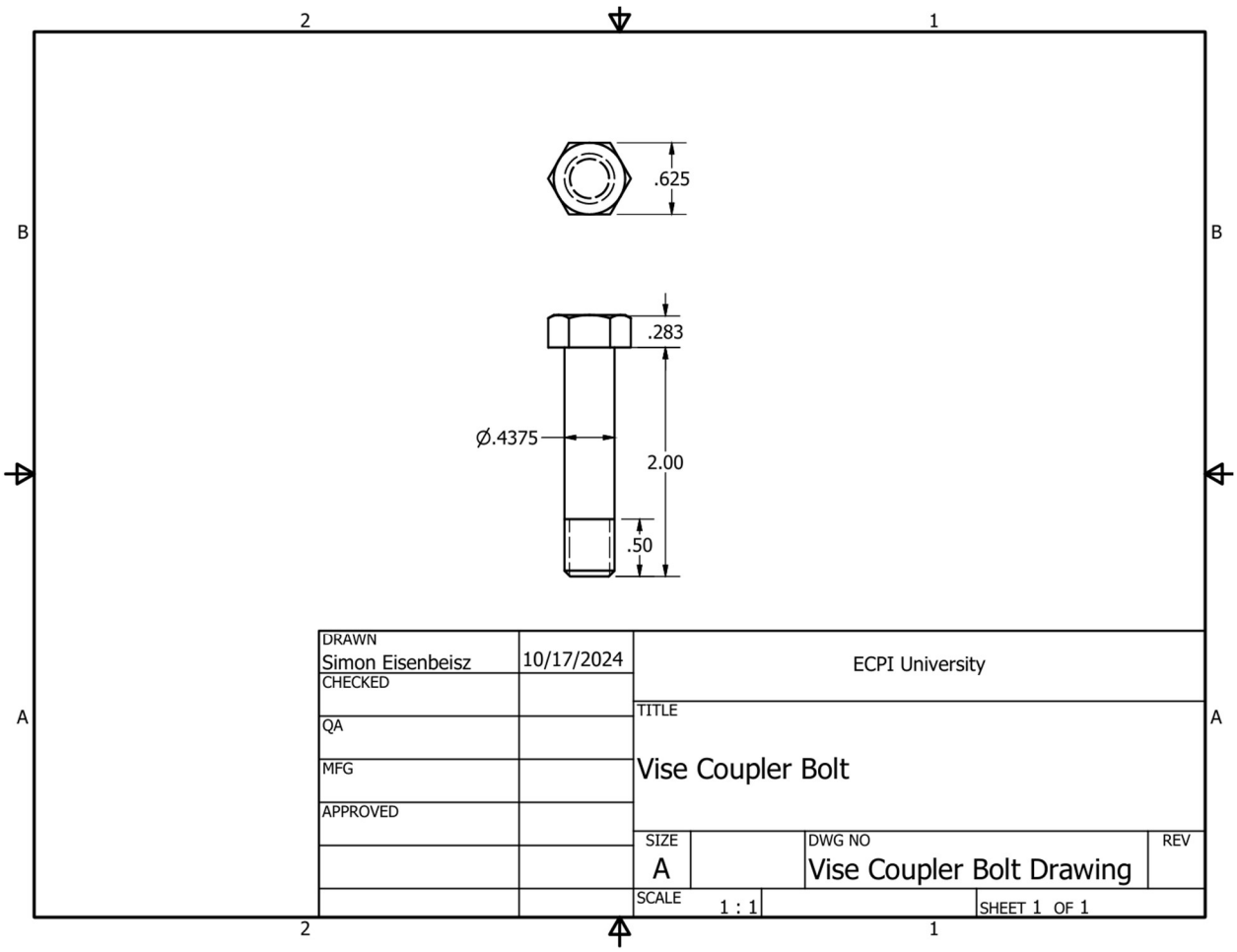

Figure 18 - Vise Coupler Bolt

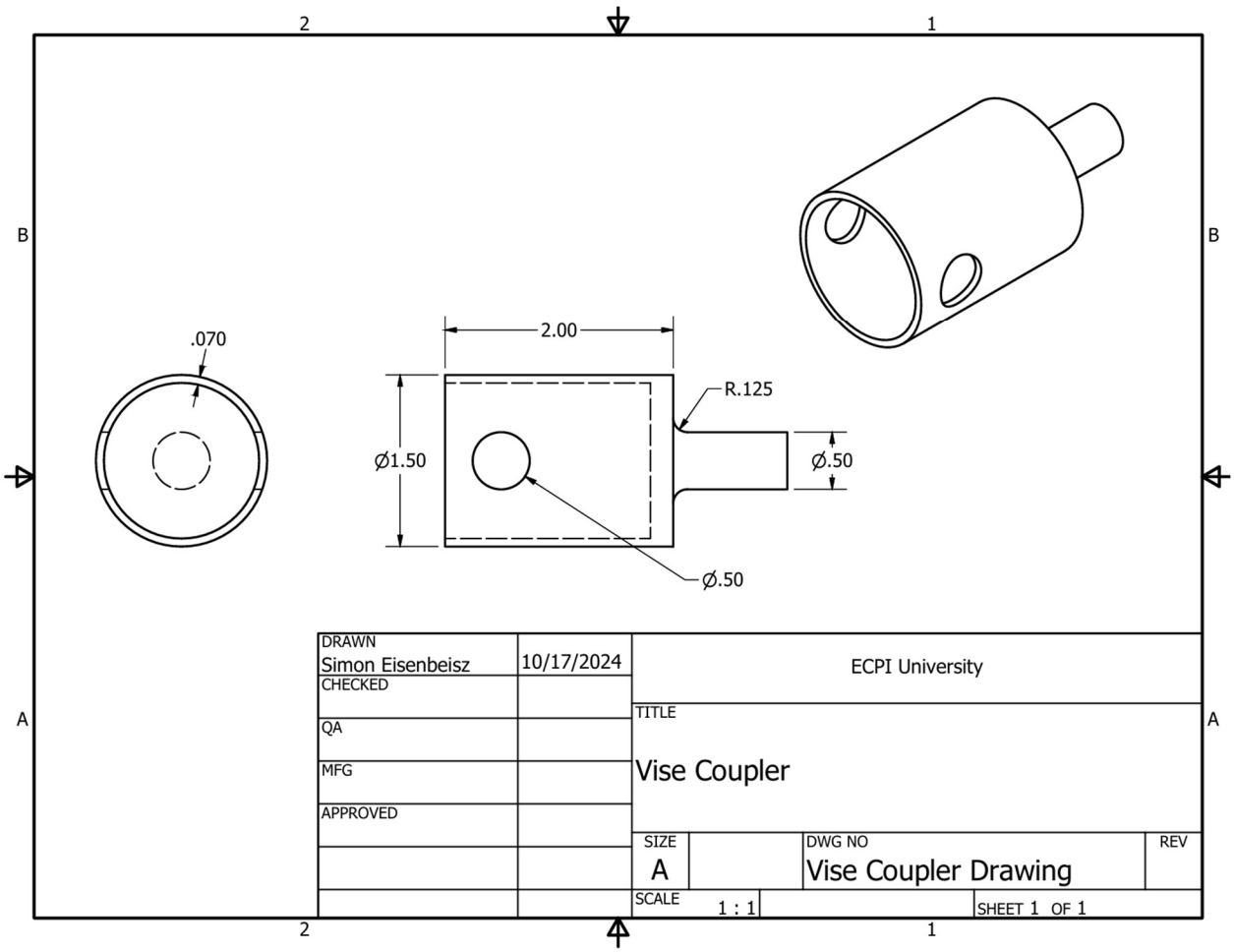

Figure 19 - Vise Coupler

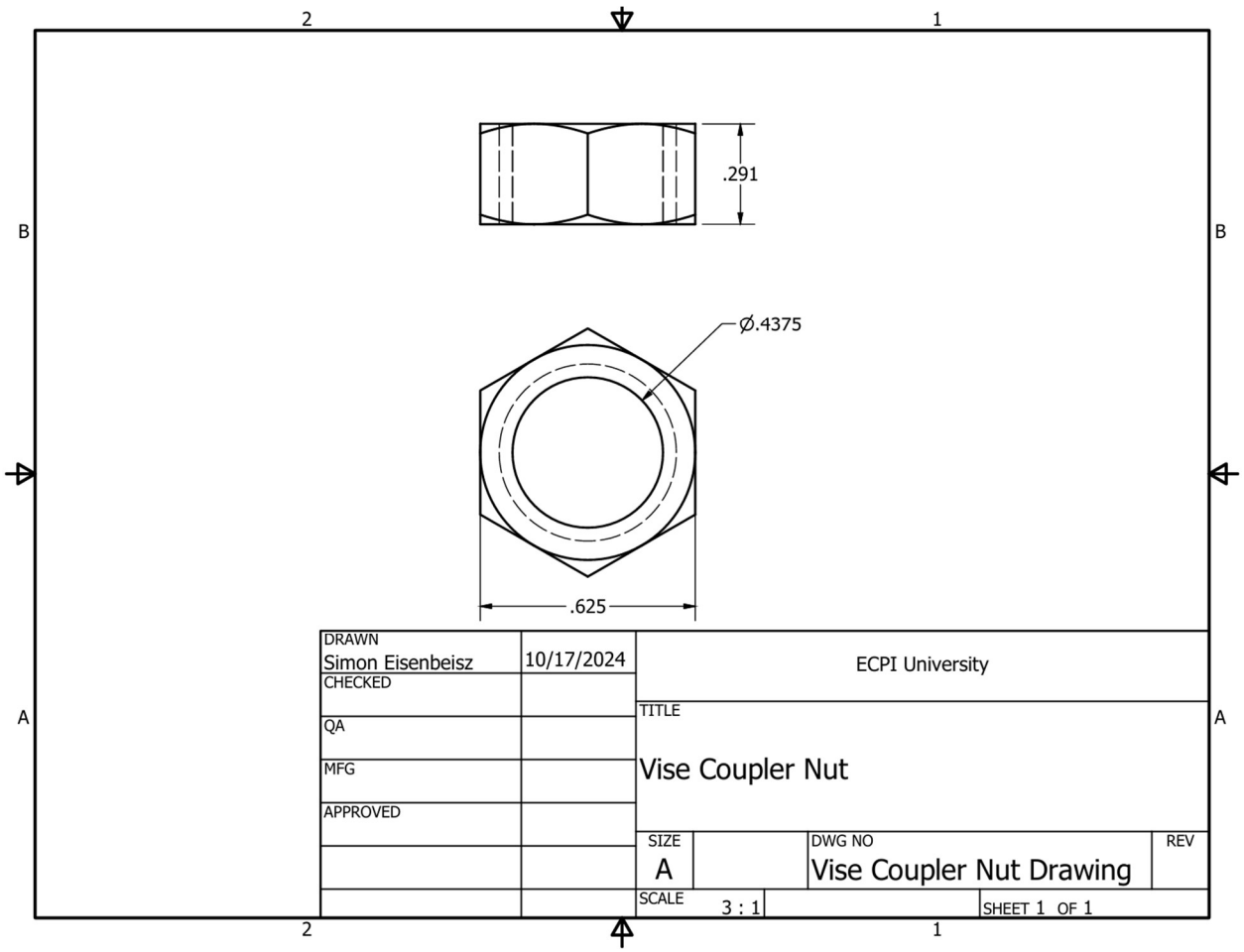

Figure 20 - Vise Coupler Nut

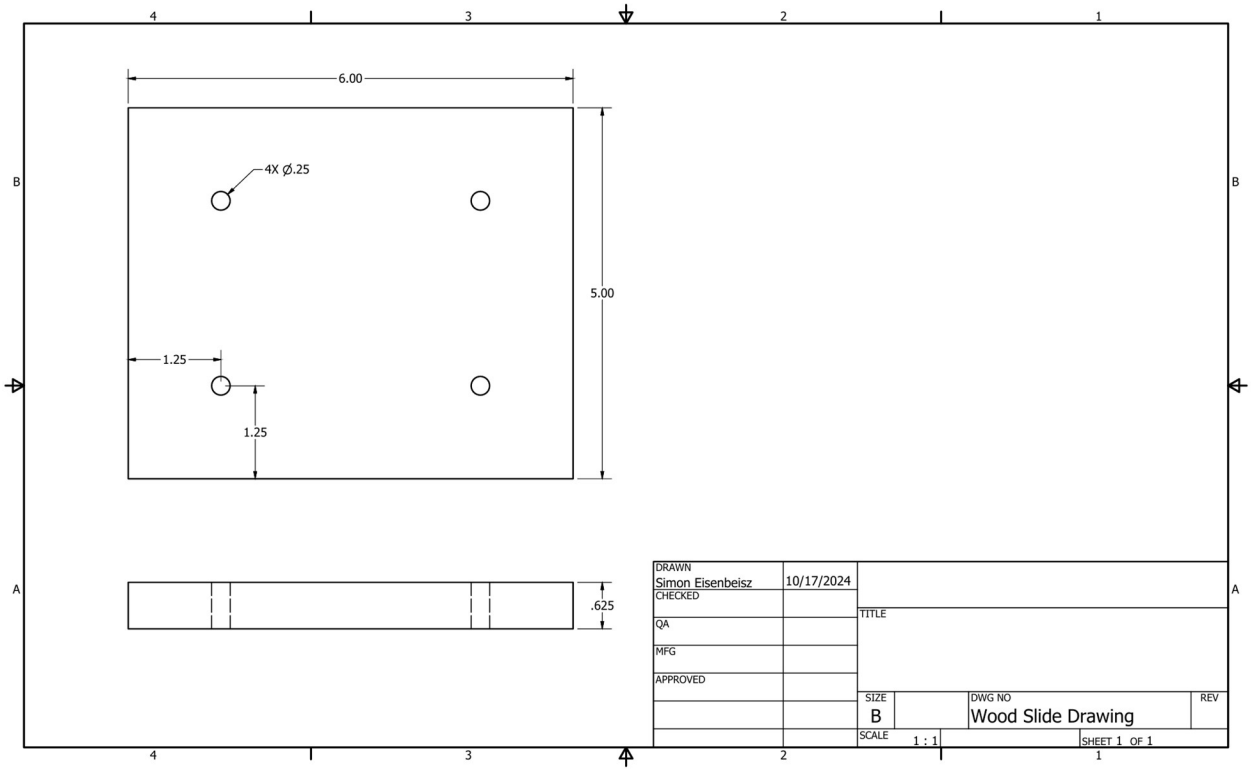

Figure 21 - Wood Slide

BOM

Item	Part Number	Thumbnail	BOM Structure	Unit QTY	QTY
1	Workbench		Normal	Each	1
2	Bench Vise Slide Frame		Normal	Each	1
3	Bench Vise Dynamic Jaw	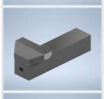	Normal	Each	1
4	Vise Swivel Base	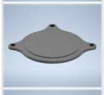	Normal	Each	1
5	Vise Screw		Normal	Each	1
6	Vise Coupler		Normal	Each	1
7	Vise Coupler Bolt		Normal	Each	1
8	Vise Coupler Nut	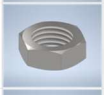	Normal	Each	1
9	Joint End Pieces		Normal	Each	2
10	Joint Cross		Normal	Each	2
11	Joint Center		Normal	Each	1
12	Generic Motor	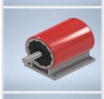	Normal	Each	1
13	Wood Slide		Normal	Each	1
14	Wood Base		Normal	Each	1
15	Aluminum Rail		Normal	Each	2

Figure 22 - Bill of Materials

Appendix B

Budget

Team 2: Automatic Motorized Bench Vise – Budget

Description	Estimated Cost	Final Cost
Motor	$65	$63.43
Universal joint	$25	$20.18
Vise	$75	$85.54
Steel bars	$25	$38.68
Wood	$0	$0
Foot pedal	$20	$30.26
Wiring/electrical components	$15	$0.75
Misc. metal pieces	$15	$17.85
Other		$44.51
Total Cost:	$250	$301.20

Appendix C

Schedule/Gantt Chart

Motorized Bench Vise

Senior Project **Project lead: J'Cori Hall**

Team 2

Project start: **Mon, 11/4/2024**

Display week: **1**

TASK	ASSIGNED TO	PROGRESS	START	END
Concept Development				
Market Analysis				
System Design				
Revised design (report)	Shawn Dye	0%	11/11/24	11/17/24
Detailed updated schematics, flowcharts, code, etc.	Simon Eisenbeisz	0%	11/11/24	11/17/24
Implementation plan/progress	Simon Eisenbeisz	0%	11/11/24	11/17/24
Testing plan developed	All	100%	11/11/24	11/17/24
Testing complete	Simon Eisenbeisz	20%	11/11/24	12/1/24
Updated parts list and references	Simon Eisenbeisz	80%	11/11/24	11/17/24
Testing & Interpretation	Simon Eisenbeisz	0%	11/18/24	11/24/24
Design Testing	Simon Eisenbeisz	0%	11/18/24	11/24/24
Data Interpretation	Shawn Dye	0%	11/18/24	11/24/24
Problems/Issues Reconciliation	Simon Eisenbeisz		11/18/24	11/24/24
Proof of Concept Achieved	Simon Eisenbeisz	0%	11/18/24	11/24/24
System Build				
Parts Ordered	Simon Eisenbeisz	100%	11/11/24	11/17/24
Parts Received	Simon Eisenbeisz	100%	11/11/24	11/24/24
		0%		
		0%		
		0%		
Report Documentation				
Revised Project Proposal	Shawn Dye	100%	11/3/24	11/9/24
Proof of Concept Report	Shawn Dye	0%	11/11/24	11/17/24
Testing and Analysis Report	Shawn Dye	0%	11/11/24	11/17/24
Gantt Chart	Shawn Dye	20%	11/3/24	11/10/24
Presentation - Draft Copy	J'Cori Hall	0%	11/25/24	12/1/24
Presentation - Final Copy	J'Cori Hall	0%	12/2/24	12/8/24
Project Report - Rough Draft	Shawn Dye	0%	11/25/24	12/1/24
Project Report -Final Copy	Shawn Dye	0%	12/2/24	12/8/24

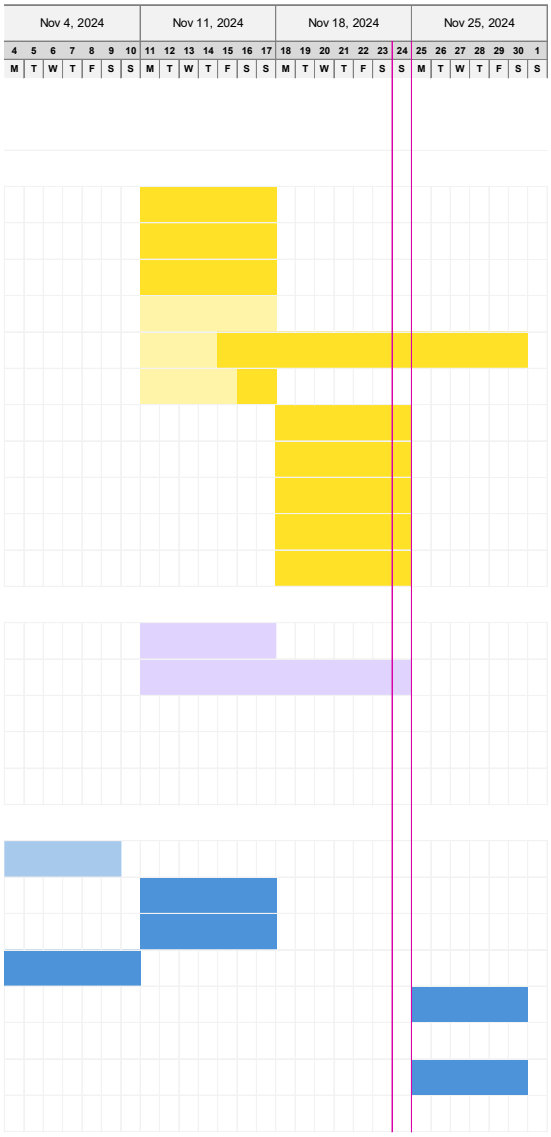

Insert new rows ABOVE this one

Appendix D

Block Diagram

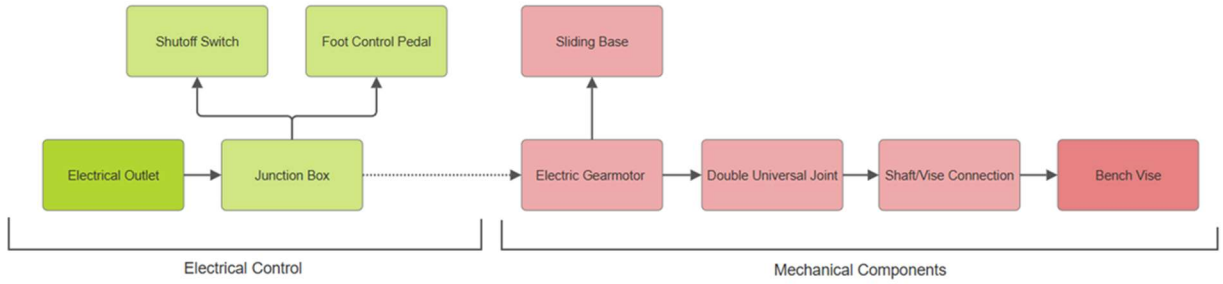

Operational Diagram

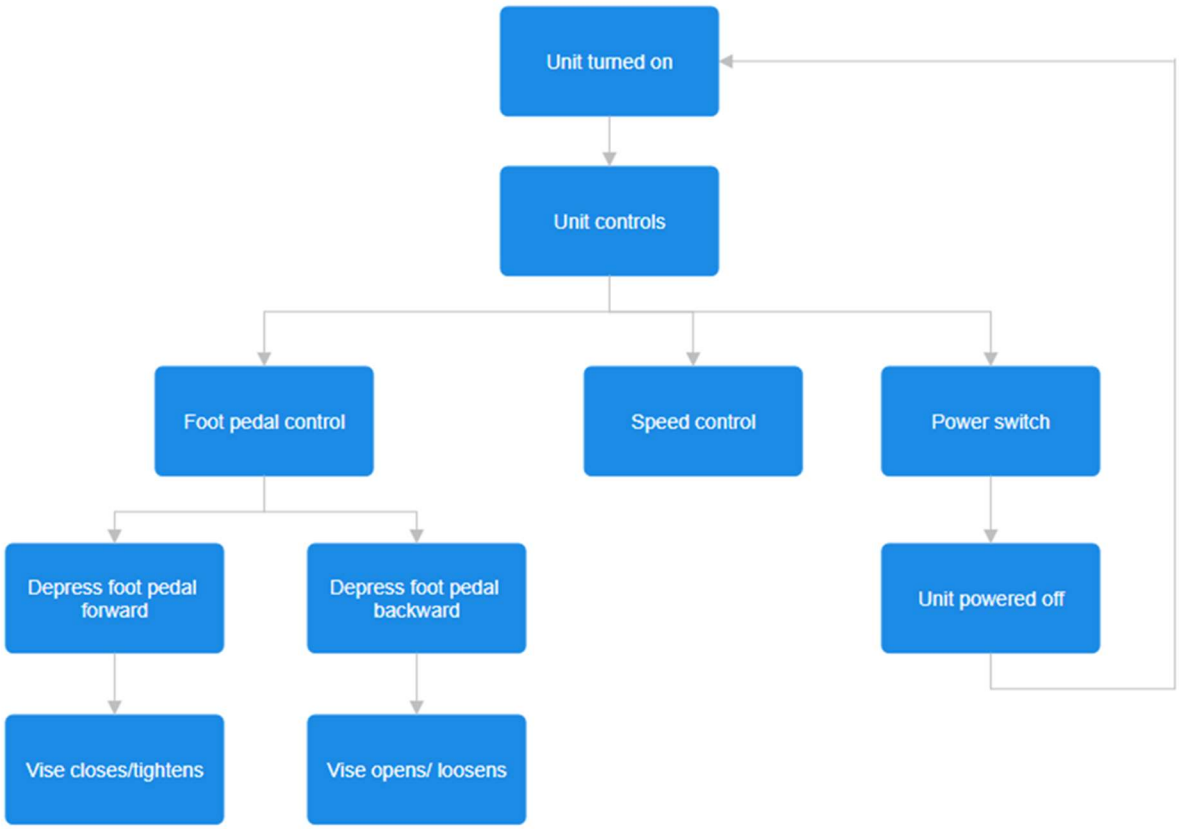

Appendix E
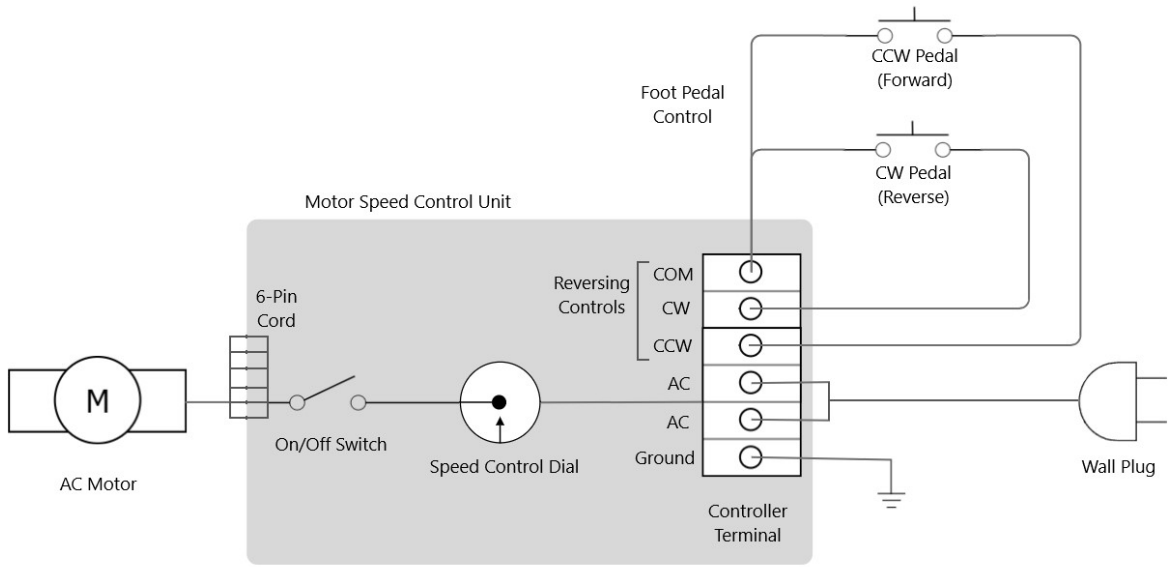
Wiring Diagram